IMPORTANT NOTICE - READ CAREFULLY

Portable Bypass Kit

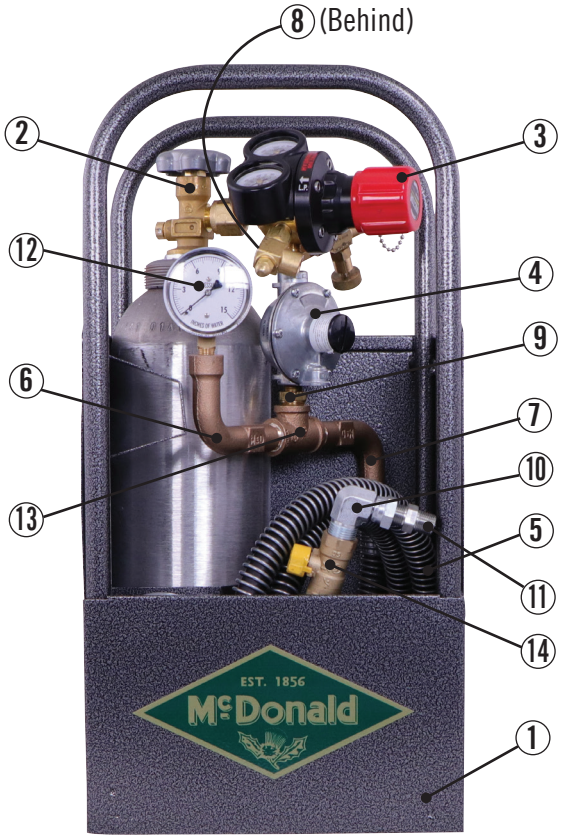

	Part No.	Description
1	4819-504	Aluminum Bypass Box Complete Weld and Powder Coat
2	4819-505	CGA 350 Aluminum Cylinder
3	4819-506	High Pressure Regulator - Methane
4	4819-507	Low Pressure Regulator 5”-10” WC
5	4819-508	CNG 1/2 NPT Hose w/Spring Guard
6	4819-511	Bypass Box Elbow 1/2 MNPT x 1/2 FNPT - Mach
7	4819-512	Bypass Box Elbow 1/2 MNPT x 1/4 FNPT - Mach
8	4819-513	Hex Nipple 1/4 Male High Pressure Brass w/ Vibraseal
9	4819-514	Hex Nipple 3/8 X 1/2 MNPT Brass w/ Vibraseal
10	4819-515	Elbow 90 1/2 MNPT x 3/8 NPSM Swivel Steel Plated
11	4819-516	Hex Nipple NIPPLE 3/8 MNPT Swivel Connection Steel Plated
12	4819-517	Low Pressure Gauge 0”-15” W.C.
13	4422-073	2230 1/2 Tee
14	4901-161	10710Y 1/2 Gas Ball Valve CSA Yellow Handle

WARNING: This product can expose you to chemicals including lead, which is known to the State of **CALIFORNIA** to cause cancer and birth defects or other reproductive harm. For more information go to: www.P65Warnings.ca.gov.

IMPORTANT NOTICE - READ CAREFULLY

Portable Bypass Kit

Portable Bypass Kit Instructions

Before Use

- Ensure all users have proper training with Portable Bypass Kit
- Inspect cylinder and kit completely before each use
  - Verify CNG cylinder has been inspected and hydrostatically tested within the last 5 years and properly marked per DOT and local requirements
- Inspect fittings, regulators, gauges and hose for any signs of damage - replace if identified
- Under pressure inspect water column gauge for accuracy with a manometer
- Follow all local instructions and codes for filling the CNG cylinder
- Do not Overfill the cylinder
- Store cylinder in truck or main center according to Utility and Local codes

Safety

- Read instructions before performing bypass service
- Check for stray voltage at the meter set
- Beware of sources of ignition and safety hazards when purging gas or checking pressure
- DO NOT perform operation in confined space
- DO NOT leave PBK unattended while in use
- Monitor gauges while in use to ensure pressure is maintained through by-pass operation
- Internal damage can occur to CNG cylinder if left empty with valve open
- Do not exceed pressure rating of any component on PBK
- Follow all utility procedures and safety protocols during operation

Performing Bypass with PBK

- Ensure you have proper kit and fittings for performing the bypass operation
- Verify cylinder pressure is adequate for performing the task at hand per utility standards
- With valve in normal flow mode **(Fig. A)** remove bypass port plug from valve
- Thread NPT hex nipple (1/4" or 3/8") into bypass port hand tight **(Fig. B)**
- Loosely thread on swivel elbow connection
- Open 1/2" valve on hose to purge through loose connection before tightening swivel hand-tight **(Fig. C)**
- Turn bypass valve counter clockwise to bypass *position **(Fig. D)**
- The meter set is now in bypass mode and service can be performed on any component prior to inlet of bypass valve
- When service is complete and meter is purged per utility standards, slowly turn the valve clockwise back to normal flow mode **(Fig. C)**
- When complete, turn off 1/2" valve on the hose and loosen swivel connection **(Fig. B)**
- Remove the NPT hex nipple and replace bypass port plug tightly **(Fig. A)**
- Turn off main cylinder valve and roll up hose to store in kit
- Recommended to purge line / bleed hose

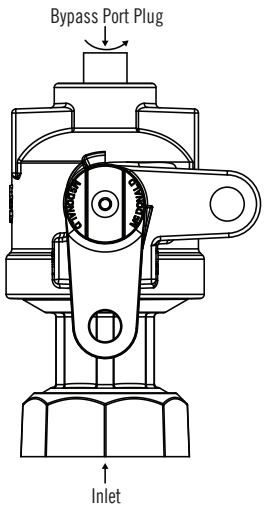

(Fig. A)

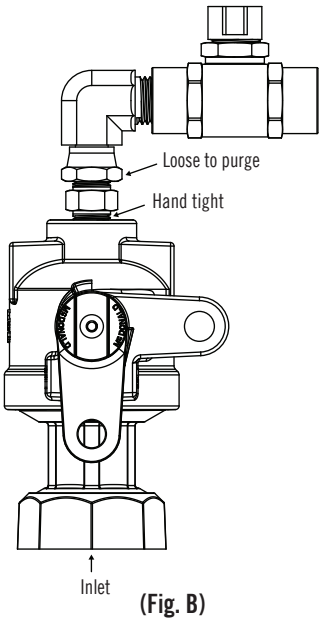

(Fig. B)

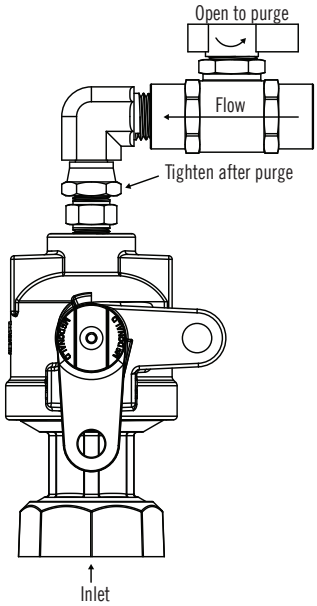

(Fig. C)

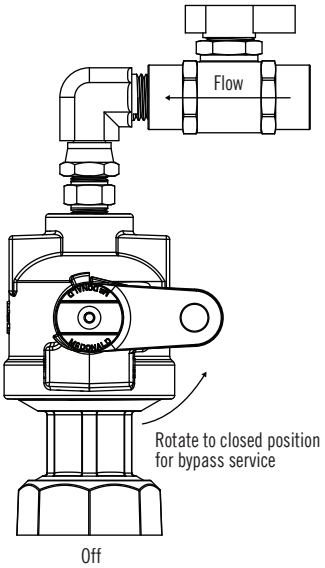

(Fig. D)

*Follow the standard bypass procedure for A.Y. McDonald Angle Gas Ball Valves according to instruction sheet 3210-389.